TABLE OF CONTENTS

0.1 Circulation List

0.2 Amendment Record

FOREWORD

1. SCOPE
2. REFERENCES
3. TERMS AND DEFINITIONS
4. REQUIREMENTS
5. TESTS AND INSPECTION
6. MARKING AND PACKING
7. DOCUMENTATION

ANNEX A: SCHEDULE OF GUARANTEED TECHNICAL PARTICULARS *(to be filled and signed by the Manufacturer and submitted together with relevant copies of the Manufacturer's catalogues, brochures, drawings, technical data & calculations, sales records for past five years, four customer reference letters, details of manufacturing capacity, the manufacturer's experience, copies of complete type test reports and accreditation certificate to ISO/IEC 17025 for the third party testing laboratory for tender evaluation, all in English Language)*

0.1 Circulation List

COPY NO.	COPY HOLDER
1	Manager, Standards
Electronic copy (pdf) on KPLC server currently: http://172.16.1.40/dms/browse.php?fFolderId=23	

0.2 Amendment Record

Rev No.	Date (YYYY-MM-DD)	Description of Change	Prepared by (Name & Signature)	Approved by (Name & Signature)
Issue 2 Rev 0	2011-12-28	Added 300mm2 AAAC in clause 4.2.1 and 24.71mm diameter in clause 4.3.3.1	Geoffrey Gathige	G. Owuor
Issue 2 Rev. 1	2015-09-17	Replace issue 2 Rev 0 and includes new standards of manufacture	M. Apudo N. Wairimu	Dr. Eng. Peter Kimemia

Issued by: Head of Section, Standards	Authorized by: Head of Department, Standards
Signed:	Signed:
Date: 2015-09-17	Date: 2015-09-17

FOREWORD

This specification has been prepared by the Standards Department of The Kenya Power and Lighting Company Limited (KPLC) and it lays down requirements for overhead line fittings for 10-300mm² conductors and cables. The specification is to be used by KPLC in procurement of the items.

The bidder shall submit information which confirms the manufacturer's satisfactory service experience with products which fall within the scope of this specification.

1. SCOPE

1.1 This specification is for overhead line fittings for use on overhead power lines operating at voltages up to and including 66 kV (66,000 Volts) a.c. 50Hz.

1.2 This specification covers the following overhead line fittings:-

(a) Conductor terminations.
(b) Joints (Non-tension joints).
(c) Suspension clamps.
(d) Connectors (Line Taps)

Particular requirements for each type of fittings as may be relevant for a specific requisition are given in clause 4.

The specification also covers inspection and test of the overhead line fittings as well as schedule of Guaranteed Technical Particulars to be filled, signed by the manufacturer and submitted for tender evaluation.

The specification stipulates the minimum requirements for overhead line fittings acceptable for use in the company and it shall be the responsibility of the Supplier and Manufacturer to ensure adequacy of the design, good workmanship and good engineering practice in the manufacture of the fittings for KPLC.

The specification does not purport to include all the necessary provisions of a contract.

2. REFERENCES

The following standards contain provisions which, through reference in this text constitute provisions of this specification. Unless otherwise stated, the latest editions (including amendments) apply and shall be complied with by the supplier.

ISO 1461:	Metallic Coatings – Hot dip galvanized coatings on fabricated ferrous products – Requirements.
ISO 4948-1:	Steel - Classification - Part 1: Classification of steels into unalloyed and alloy steel based on chemical composition
ISO 9477:	High strength cast steels for general engineering and structural purposes
ISO 643:	Steels Micrographic determination of the apparent grain size
ISO 6506-1;	Metallic materials - Brinell hardness test - Part 1: Test method
IEC 61284:	Overhead Lines – Requirements and Test for Fittings.
IEC 60120:	Dimensions of ball and socket couplings of string insulator units
IEC 60372:	Locking devices for ball and socket couplings of string insulator units — Dimensions and tests
BS EN 515:	Aluminium and aluminium alloys. Wrought products. Temper designations.
BS EN 755-2:	Aluminium and aluminium alloys. Extruded rod/bar, tube and profiles. Mechanical properties.
BS EN 586-1&2:	Aluminium and Aluminium alloys-Forging. –Part 1: Technical conditions for inspection and delivery; -- Part 2: Mechanical properties and additional property requirements
BS EN 573-3&4:	Aluminium and aluminium alloys-Chemical composition and form of wrought products.—Part 3: Chemical composition; Part 4: Forms of products.
BS 3288-1, 2&3:	Insulator and conductor fittings for overhead power lines. –Part 1: Performance and General Requirements; –Part 2: Specification for a range of insulator fittings
BS EN 10090:	Valve steels and alloys for internal combustion engines
DIN 74-1:	Countersinks for countersunk head screws
DIN 48072-1&2:	Line taps – Part 1: Stranded aluminium conductors and ACSR; Part 2: Stranded copper conductors and solid ones
ENA TS 43-92:	Overhead Line Fittings

AWS D1.2/D1.2M: Structural Welding Code – Aluminum

3. TERMS AND DEFINITIONS

The definitions given in the reference standards apply.

4. REQUIREMENTS

4.1. SERVICE CONDITIONS

The fittings shall be suitable for continuous operation outdoors in tropical areas

a) At altitudes of up to 2200m above sea level,
b) Humidity of up to 90%,
c) Average ambient temperature of +30°C with a minimum of -1°C and a maximum of +40°C and
d) Heavy saline conditions along the coast.

4.2. GENERAL REQUIREMENTS

4.2.1. The fittings shall be designed and manufactured to IEC 61284, BS 3288-2:2009 and the requirements of this specification and shall be suitable for use on

a) 25-150mm² Aluminium Conductor Steel Reinforced (ACSR),
b) 50-100mm² All Aluminium Conductor (AAC)
c) 50-300mm² All Aluminium Alloy Conductor (AAAC),
d) 16-300mm² Aluminium Cables
e) 10-120mm² Copper Conductor/Cables (tap).

4.2.2. The fittings shall be free from defects which would likely cause them to be unsatisfactory in service.

4.2.3. All parts of each fitting shall be inherently resistant to atmospheric corrosion, both during storage and in service.

4.2.4. All ferrous metal parts except those made of stainless steel shall be protected by hot dip galvanizing as per the requirement of ISO 1461. The minimum average coating thickness shall be 85µm for flats articles and 50µm for centrifuged articles in accordance with ISO 1461.

4.2.5. Bolts and nuts shall be made from stainless steel which shall fulfill the requirements of quality A2-80 according to ISO 3506. The mechanical properties shall conform to ISO 889-1 and ISO 898-2.

4.2.6. The threads of bolts, nuts and tapped holes shall be cut and shall be well oiled or greased. All other threads shall be formed before galvanizing. The thread design shall be triangular ISO thread in accordance with ISO 68-1; diameter/pitch combinations in accordance with ISO 262 and thread tolerance class of 6g as per ISO 965-2, for coarse tolerance quality.

4.2.7. Washers shall provide sufficient resistance to corrosion and shall be made from stainless steel with a minimum quality equivalent to A2 of ISO 3506. Washers shall have a minimum hardness of 240 HBW.

4.2.8. General arrangement drawings for the various types of fittings are attached in Annex B of this specification. Drawings for fittings shall be as per BS 3288-2 Reference Numbers are available in the standard, ENA TS 43-92 and KPLC code of practice.

4.3. PARTICULAR REQUIREMENTS

4.3.1. Conductor Terminations

4.3.1.1. Ball Ended Hook, Ball clevis, Socket Clevis and Socket Tongue

4.3.1.1.1. *Design and construction*

4.3.1.1.1.1. Ball ended hook, socket clevis and socket tongue shall be suitable for use on Aluminium Conductor Steel Reinforced (ACSR) of outer diameter between 7.00mm and 18.2mm (25mm² and 150mm²) and All Aluminium Alloy Conductor (AAAC) of outer diameter approximately 24.71, with standard disc insulator of ball and socket type with the ball pin diameter of 16 mm in accordance with Fig. 1 & 2 as per IEC 60120.

4.3.1.1.1.2. Socket type fittings shall be supplied complete with locking devices such as split pins and security clips in accordance with BS 3288-4 and clause 4.3.1.1.4

4.3.1.1.1.3. Ball ended hook, socket clevis and socket tongue shall be as per BS 3288 Reference Numbers given in Table 1:

Table 1: Reference numbers as per BS 3288-2

Description	BS 3288 Reference Number
Ball ended hook	15/81
Ball clevis	15/83
Socket clevis, single hole	15/84
Sock clevis, double hole	15/25
Socket tongue, single hole	15/85
Socket tongue, double hole	15/35

NOTE: *Drawings for Ball Ended Hook, Socket Clevis and Socket Tongue shall be as per BS 3288-2 and ANNEX B.*

4.3.1.1.2. **Material of manufacture**

4.3.1.1.2.1. The steel used to manufacture ball ended hook, socket clevis and socket tongue shall be produced by an electric, or by an oxygen-blown, process. The manufacturer shall submit a cast analysis of the steel with the bid for purposes of tender evaluation.

4.3.1.1.2.2. The steel shall be fully killed, suitable for forging and capable of being heat treated to obtain the mechanical properties required by this specification.

4.3.1.1.2.3. The steel shall contain at least two of the following elements in the alloying proportions specified in ISO 4948-1:

a) Nickel ;
b) Chromium;
c) Molybdenum.

Its content of sulfur and phosphorus shall be restricted in accordance with Table 2.

Table 2: Contents of sulphur and phosphorous in forged steel

Element	Maximum content (% by mass) determined by	
	Cast analysis	Check analysis
Sulphur	0.025	0.03
Phosphorous	0.025	0.03

4.3.1.1.2.4. The steel shall be made in conformity with fine grain practice in order to obtain an austenitic grain size of 5 or finer when tested in accordance with ISO 643. This could be achieved, for example, by ensuring that it contains sufficient aluminium or an equivalent element to permit the manufacture of the steel forgings stabilized against strain-age embrittlement during service; a minimum value of 0.025 % of total aluminium is given for guidance.

4.3.1.1.2.5. Within the limitations specified above, it is the responsibility of the manufacturer to select steel such that the finished steel forgings, suitably heat-treated, comply with the requirements for mechanical properties of this specification.

4.3.1.1.2.6. Each component shall be hardened from a temperature above the AC3 point and tempered before being subjected to the manufacturing proof force. The tempering temperature shall be a minimum of 400 ^{0}C.The tempering conditions shall be at least as effective as a temperature of 400 ^{0}C maintained for a period of 1 h.

4.3.1.1.2.7. Surface hardening shall not be permitted for load bearing parts of the component. The surface hardness shall not exceed 380 HBS measured in accordance with ISO 6506-1.

4.3.1.1.2.8. The material for the fasteners (bolts, nuts and washers) for the ball ended hook, socket clevis and socket tongue shall be as per clauses 4.2.5 – 4.2.7 of this specification.

4.3.1.1.3. **Dimensional requirements for ball and socket.**

The dimensional requirements for the ball and socket shall be as per the Figure 1 & 2 and as per IEC 60120 and IEC 60372.

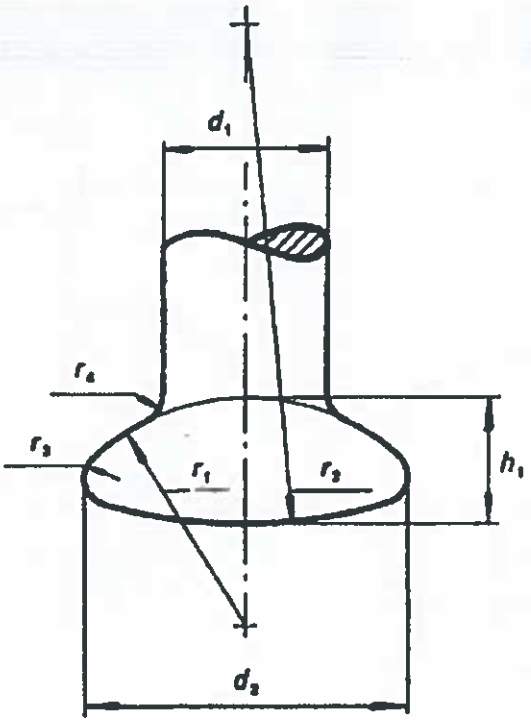

Fig. 1: Ball

Table 3: Dimensions of the ball as per IEC 60120

Designated coupling size	d_1	d_2	h_1	r_1	r_2	r_3^*	r_4
16	$17\ ^{0}_{-1.2}$	$33.3\ ^{0}_{-1.5}$	$13.4\ ^{0}_{-1.3}$	23	50	3	$3\ ^{+1}_{-0.5}$
20	$21\ ^{0}_{-1.3}$	$41\ ^{0}_{-1.6}$	$19.5\ ^{0}_{-1.4}$	27	60	5.7	3.5^{+1}_{-1}

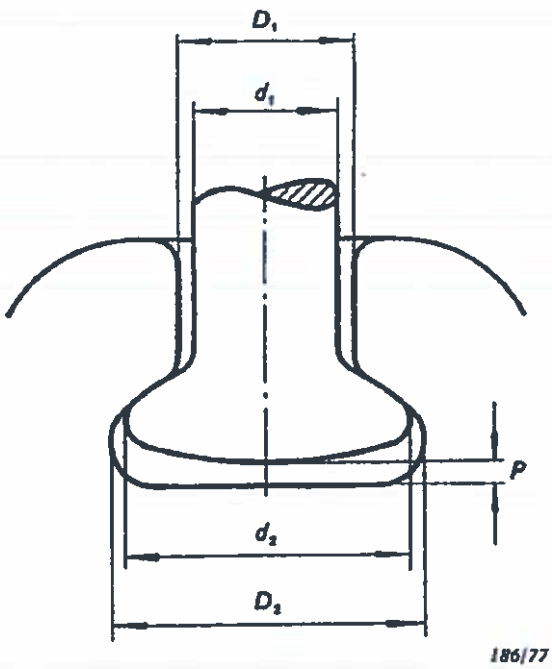

The pin ball in the socket entry.

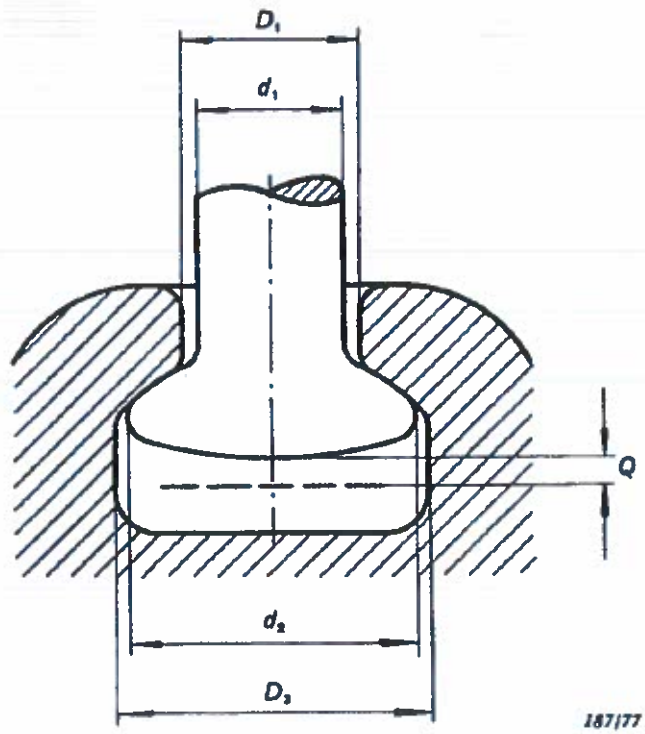

The pin ball in the socket interior.

Fig. 2: Ball & Socket

Table 4: Clearance between the pin ball and the socket end as per IEC 60120

Designated size of coupling	$D_1 - d_1$		$D_2 - d_2$	$D_3 - d_2$	P		Q [1)]
	Min	Max.	Min.		Min.	Max.	Min.
16B	2.2	5.0	1.2	1.2	3.6	6.5	3.7
20	2.0	5.4	1.5	1.5	1.0	4.5	2.0
[1)] Clearance between the pin ball and the locking device							

4.3.1.1.4. **Locking devices for ball and socket couplings**

4.3.1.1.5. These devices shall have standard dimensions and tested as per IEC 60372 for the ball and socket sizes in Table 3 & 4.

4.3.1.1.6. The locking devices shall be made of austenitic stainless steel capable of complying with the requirements relating to intercrystalline corrosion test of BS EN 10090.

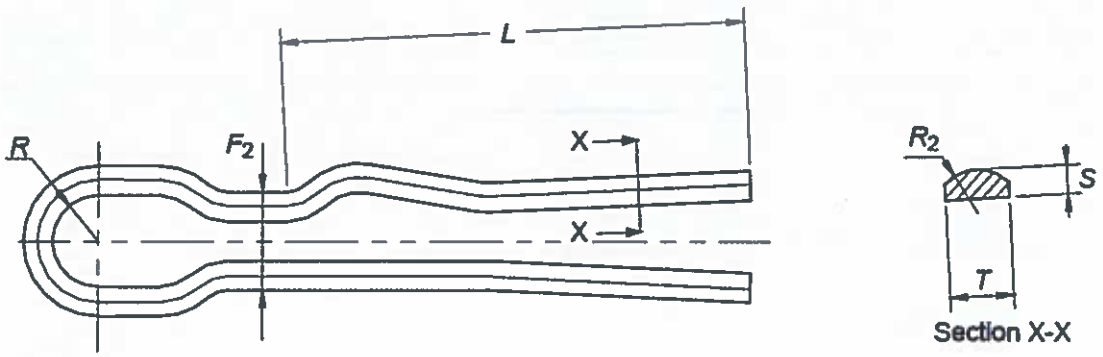

Fig. 3: Split pin

Table 5: Standard dimensions for the split pins as per IEC 60372

Standard coupling	Standard split pins					
	S	T	R_2	$F_{2\ min}$	R_{min}	L_{min}
16	3.2 ± 0.1	$7.9^{+0.2}_{0}$	4.8	10.7	3	38
20	3.2 ± 0.1	$7.0^{+0.2}_{0}$	4.8	10.7	3	49

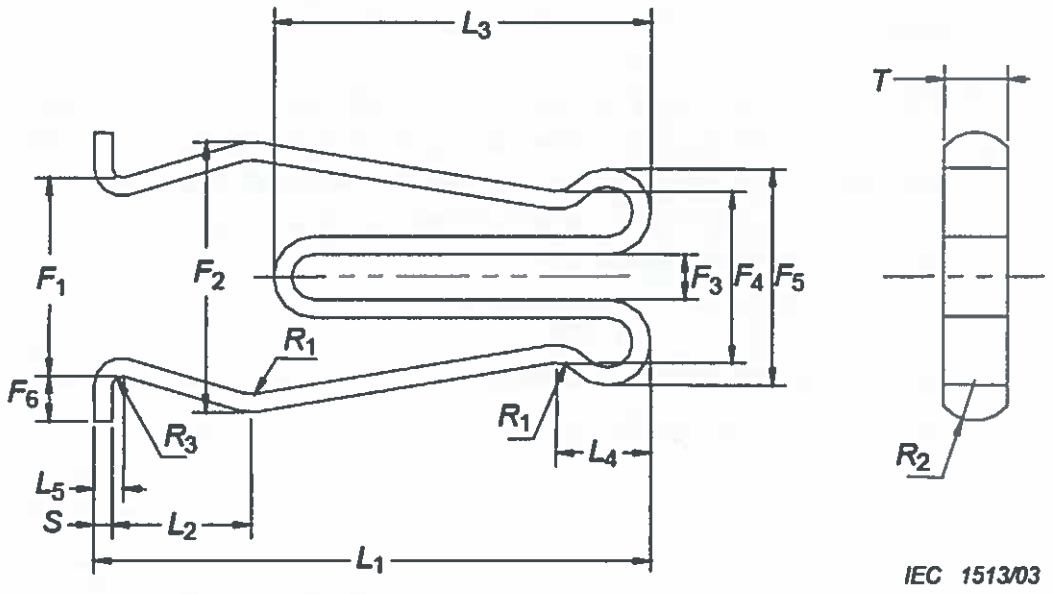

Fig. 4: Security W-Clip

Table 6: Dimensions of the W-Clips

Standard coupling	F1	F2	F3	F4	F5	F6	L1	L2	L3	L4	L5	R1	R2	R3	S	T
16B	22	28	5	19	24	5^{+1}_{0}	50±1.5	15.5	36±1.5	10.5	3	2.5	4.5	2.5	$1.5^{+0.2}_{0}$	$7.9^{+0.2}_{0}$
20	22	30	5	19	24	5^{+1}_{0}	62±1.5	15.5	42±1.5	10.5	3	2.5	4.5	2.5	$2.0^{+0.2}_{0}$	$3.5^{+0.2}_{0}$

4.3.2. TENSION CLAMP (STRAIN CLAMP)

4.3.2.1. General

4.3.2.1.1. Tension (strain) Clamp shall be bolted type and shall be suitable for use on Aluminium Conductor Steel Reinforced (ACSR) of outer diameter between 5.1mm and 30.5mm (25mm² and 300mm²).

4.3.2.1.2. The clamp shall have cotter bolts, U-bolts and a pin. The number of bolts shall be 3, 4 or 5 (to be stated in the tender).

4.3.2.1.3. The clamp shall have slip strength of not less than 85% of the rated ultimate strength of conductor it is intended for use with.

4.3.2.2. Material

4.3.2.2.1. **The body and the keeper**- shall be manufactured from aluminium alloy containing a maximum of 0.4% Cu in accordance with EN 515 and EN 755-2:2008 such as designation 6061-T6 or equivalent. The alloy shall be resistant to inter-crystalline, layer and stress corrosion. Further properties of the alloy shall be:

a) Hardness min 95 HBW,
b) Resistivity max. 40 nΩm at 20°C,
c) Proof stress min. 276 MPa
d) Tensile strength min. 310MPa.
e) A_{50}% elongation at break min. 12%.

4.3.2.2.2. **Threaded inserts** -To provide sufficient resistance to corrosion threaded inserts shall be made from stainless steel with a minimum quality equivalent to A2 of EN ISO 3506. The required mechanical properties shall be equivalent to those given for bolts and nuts in 4.2.5 – 4.2.6.

4.3.2.2.3. **Straps** - Straps shall be made from hot-dip galvanized steel. The thickness of the zinc coating shall be at least 80µm and meet the requirements according to ISO 1461.

4.3.2.2.4. The material for the fasteners (bolts, nuts and washers) for the tension clamps shall be as per clauses 4.2.5 – 4.2.7 of this specification.

4.3.2.3. **Design**

4.3.2.3.1. **Clamp** - It shall be possible to move clamps along the conductor freely. The trunnion of the clamp may be an integral part of the body.

4.3.2.3.2. **Conductor supporting groove** - The profile of the conductor supporting groove, in the body and the keeper, shall conform to the measurements given in Figure 7 and adjacent table. The conductor groove radii in body and keeper shall be closely adjusted to the conductor diameter in question in accordance with Figure 7 and be free from irregularities and sharp edges

4.3.2.3.3. **Fatigue damages** - Clamps may not cause fatigue damage on the conductor.

4.3.2.3.4. **Straps** - The hole in the strap for the trunnion of the body shall be round and have a suitable size in relation to the trunnion.

4.3.2.3.5. **Bolts and nuts**

- Bolts and nuts shall have M12 metric threads with 18 mm width across flats according to ISO 272. Bolts and nuts shall be attached to the tension clamp in such a way that they are impossible to drop accidentally.
- Bolts shall be long enough to protrude outside the thread of the nut. Counter bores and countersinks shall be made in accordance with DIN 74-1.

4.3.2.3.6. **Washers** - Washers shall be manufactured in accordance with ISO 7091.

4.3.3. **SUSPENSION CLAMPS**

4.3.3.1. **General**

Suspension clamps design shall have the axis of oscillation in the plane of the axis of the conductor and be capable of being fitted with counter weights. They shall be used for both phase conductors and shield wires (where applicable) as well as for straight line and angle supports.

4.3.3.2. **Material**

4.3.3.2.1. **The body and the keeper**- shall be manufactured from aluminium alloy containing a maximum of 0.10% Cu in accordance with EN 515 and EN 755-2:2008 such as designation 6082-T5 or equivalent. The alloy shall be resistant to inter-crystalline, layer and stress corrosion. Further properties of the alloy shall be:

(i) Hardness min 75 HBW,
(ii) Resistivity max. 60 nΩm at 20°C,
(iii) Hardness min 95 HBW,
(iv) Proof stress min. 230 MPa
(v) Tensile strength min. 270MPa.
(vi) A_{50}% elongation at break min. 8%.

4.3.3.2.2. Fasteners (bolts, nuts and washers) material for the suspension clamps shall be as per clauses 4.2.5 – 4.2.7 of this specification.

4.3.3.2.3. **Threaded inserts** - shall be made from stainless steel with a minimum quality equivalent to A2 of EN ISO 3506 to provide sufficient resistance to corrosion. The required mechanical properties shall be equivalent to those given for bolts and nuts in Clause 4.2.5 – 4.2.6.

4.3.3.2.4. **Straps** - shall be made from hot-dip galvanized steel. The thickness of the zinc coating shall be at least 80µm and meet the requirements according to ISO 1461.

4.3.3.3. **Design**

4.3.3.3.1. The general design arrangement shall be as per the drawings in Annex B attached.

4.3.3.3.2. **Clamp** - It shall be possible to move clamps along the conductor freely. The trunnion of the clamp may be an integral part of the body.

4.3.3.3.3. **Conductor supporting groove** - The profile of the conductor supporting groove, in the body and the keeper, shall conform to the measurements given in Figure 8 & 9 and adjacent table. The conductor groove radii in body and keeper shall be closely adjusted to the conductor diameter in question and shall be free from irregularities and sharp edges

4.3.3.3.4. **Fatigue damages** - Clamps shall be designed not cause fatigue damage on the conductor.

4.3.3.3.5. **Straps** - The hole in the strap for the trunnion of the body shall be round and have a suitable size in relation to the trunnion.

4.3.3.3.6. **Bolts and nuts**

(i) Bolts and nuts shall have M12 metric threads with 18 mm width across flats according to ISO 272. Bolts and nuts shall be attached to the suspension clamp in such a way that they are impossible to drop accidentally.
(ii) Bolts shall be long enough to protrude outside the thread of the nut. Counter bores and countersinks shall be made in accordance with SS 2173.

4.3.3.3.7. **Washers** - Washers shall be manufactured in accordance with ISO 7091.

4.3.3.4. **Types**

a) P***ivoted*** type (similarly known as *trunnion type* respectively) as shall be stated in the tender - may be keeper type with U-Clamps or Closed Type as per Figure 8 of Annex B.

b) ***Envelope type suspension clamp*** (similarly known as *side opening type*) — may be *Clevis ended hook* type, *tongue ended hook* type as per Figure 9 of Annex B - The clamp shall be suitable for use on turning angles from 10 to 120 degrees.

NOTE: *The required type of clamp shall be stated in the tender.*

4.3.4. **NON-TENSION (BOLTED) CONNECTORS**

4.3.4.1. ***Parallel Groove Clamp (PG Clamp)***

4.3.4.1.1. **General**

4.3.4.1.1.1. Aluminium line taps shall be designed, manufactured and tested in accordance with DIN 48072-1.

4.3.4.1.1.2. PG Clamp shall be suitable for use on aluminium conductor steel-reinforced, all aluminium alloy conductor, and all aluminium conductors of outer diameter 7.00 mm to 18.2 mm for ACSR, 24.71mm for AAAC, and 9.0 mm to 13.2 mm for AAC conductors.

4.3.4.1.1.3. PG Clamps shall be used to connect two parallel conductors by accommodating one in each groove. The conductors may be similar or dis-similar.

4.3.4.1.2. **Materials**

4.3.4.1.2.1. The PG Clamps body shall be made of Aluminium Alloy Castings / Forgings / Extrusions and shall provide a minimum of 1.2 KN slip strength. The electrical power rating shall not be less than that of the conductors

4.3.4.1.2.2. The Aluminium Alloy shall be electrolytic, high strength and corrosion resistant in accordance with EN 515, EN 755-2 and clause 4.3.3.2.1. The other component parts of the PG clamp shall have the same material quality in accordance with clause 4.3.3.2.

4.3.4.1.2.3. Fasteners (bolts, nuts and washers) material for the suspension clamps shall be as per clauses 4.2.5 – 4.2.7 of this specification.

4.3.4.1.3. **Design**

4.3.4.1.3.1. **Conductor supporting groove** - The profile of the conductor supporting groove, shall conform to the measurements given in Figure 10, 11 & 12 and adjacent table. The groove of the PG clamp shall correctly fit the conductor to which it is intended for its use and shall be free from irregularities and sharp edges. It shall have adequate cross sectional area and length.

4.3.4.1.3.2. **Inserts** - Connectors for joining aluminium conductor to copper conductor shall have pressure welded copper inserts in the tap-off side. The welding procedure shall conform to AWS D1.2/D1.2M, Group M23. The tap conductor shall be of size 25 – 300mm².

4.3.4.1.3.3. **Fatigue damages** - Clamps shall be designed not cause fatigue damage on the conductor.

4.3.4.1.3.4. **Bolts and nuts**

(i) Bolts and nuts shall have metric threads according to ISO 272. Bolts and nuts shall be attached to the PG clamp in such a way that they are impossible to drop accidentally. It shall also be possible to tighten them from the upper side of the clamp.

(ii) Bolts shall be long enough to protrude outside the thread of the nut. Counter bores and countersinks shall be made in accordance with SS 2173.

4.3.4.1.3.5. **Washers** - Washers shall be manufactured in accordance with ISO 7091.

4.3.4.1.3.6. The number of bolts shall be 2, 3 or 4 (to be stated in the tender).

4.3.4.2. ***Connectors (Line Taps)***

4.3.4.2.1. **General**

4.3.4.2.1.1. The connector line taps shall be suitable for use on stranded bare conductors with diameters between 7mm and 15mm and shall correctly fit the conductor it is intended for use.

4.3.4.2.1.2. The connector shall have adequate cross sectional area and dimensions and shall have current carrying capacity at least equal to the capacity of the conductor it is intended for.

4.3.4.2.2. ***Aluminium connectors (Aluminium Line Taps).***

4.3.4.2.2.1. Aluminium line taps shall be designed, manufactured and tested in accordance with DIN 48072-1.

4.3.4.2.2.2. Aluminium connectors (line taps) shall be suitable for connecting stranded aluminium conductors of sizes 50mm² and 100mm². The general arrangement of the line taps shall be as per Figure 13 of Annex B.

4.3.4.2.2.3. Line tap body shall be made of electrolytic corrosion resistant, high strength aluminium alloy EN AW-6082 (EN AW-Al Si1MgMn) in accordance BS EN 586-1&2. Chemical composition and mechanical properties shall be submitted for tender evaluation.

4.3.4.2.2.4. The line tap body will be free from porosity and imperfections. The interior surface will be smooth and free from sharp burrs or edges which could damage the conductor. The exterior surface will be smooth.

4.3.4.2.2.5. Bolts shall be made of steel to ISO 898-1, ISO property class 8.8, hot dip galvanized to ISO 1461 with minimum mean coating thickness 40µm.The bolts will be supplied and provided with a thin film of oil.

4.3.4.2.2.6. Pressure pad shall be made of corrosion resistant, aluminium. The thickness of the pad will be such so it will not be twisted after tightening the bolts.

4.3.4.2.2.7. Aluminium line taps shall be as per the general drawing attached in Annex B.

4.3.4.2.3. ***Copper connectors (copper line taps)***

4.3.4.2.3.1. Copper line taps shall be designed, manufactured and tested in accordance with DIN 48072-2 and the general arrangement of the line taps shall be as per Figure 14 of Annex B.

4.3.4.2.3.2. Copper connectors shall be suitable for connecting stranded copper conductors of sizes 10 – 70mm².

4.3.4.2.3.3. The connector shall be manufactured from high strength cast copper alloy (high copper content) with tinned finish. All copper components or parts shall be made of more than 70% copper content alloy.

4.3.4.2.4. ***Bi-metal connectors (Bi-metal Line Taps)***

4.3.4.2.4.1. Bi-metal connectors shall be designed, manufactured and tested in accordance with DIN 48072-1 & 2 and the general arrangement of the line taps shall be as per Figure 14 of Annex B.

4.3.4.2.4.2. Bi-metal connectors shall be suitable for connecting stranded aluminium conductors of sizes 50mm² and 100mm² to stranded copper conductors of sizes 10 – 70mm². They shall be manufactured in accordance with DIN 48072-1 & 2 and the general arrangement of the line taps shall be as per Figure 14 of Annex B.

4.3.4.2.4.3. The Bi-metallic Connectors shall have:

a) All copper components or parts shall be made of more than 70% copper content alloy.
b) The copper and aluminium components shall be effectively fused to prevent deterioration by galvanic action.

4.3.4.2.4.4. Line tap body shall be made of corrosion resistant, high strength aluminium alloy designation EN AW-6082 (EN AW-Al Si1MgMn) in accordance BS EN 586-1&2 with compressed bimetallic Al-Cu sheet. Chemical composition and mechanical properties shall be submitted for tender evaluation.

4.3.4.2.4.5. After compression, the surface around the bimetallic sheet will be painted by protecting epoxy paint.

4.3.4.2.4.6. The line tap body shall be free from porosity and imperfections. The interior surface will be smooth and free from sharp burrs or edges which could damage the conductor. The exterior surface will be smooth.

4.3.4.2.4.7. Bolts, nuts, washers and other components shall be as per clause 4.2.5 and 4.2.6.

4.4. FINISH AND WORKMANSHIP

4.4.1. High quality workmanship shall be maintained in the manufacture of Bolted Clamps and Connectors and shall be free from sharp edges burrs and swarf.

4.4.2. The internal faces of aluminium fittings shall be coated with Oxide Inhibiting Grease/Compound to improve electrical contact and ensure maximum electrical performance of fittings. The quantity of Oxide inhibiting grease/compound shall be sufficient to ensure the integrity of the fitting when used on smallest conductor for which it is designed.

4.4.3. The Oxide inhibiting grease/compound shall contain suspended particles to penetrate the oxide film present on aluminium surfaces. Full details of the type of Oxide inhibiting grease / compound used in the aluminium components, and document in proof of tests carried out for compatibility shall be furnished for tender evaluation.

4.5. QUALITY MANAGEMENT SYSTEM

4.5.1. The supplier shall submit a quality assurance plan (QAP) that will be used to ensure that the cable ties physical, tests and documentations, will fulfill the requirements stated in the contract documents, standards, specifications and regulations. The QAP shall be based on and include relevant parts to fulfill the requirements of ISO 9001:2008.

4.5.2. The Manufacturer's Declaration of Conformity to applicable standards and copies of quality management certifications including copy of valid and relevant ISO 9001: 2008 certificate shall be submitted with the tender for evaluation.

4.5.3. The bidder shall indicate the delivery time of the items, manufacturer's monthly & annual production capacity and experience in the production of the type and size of items being offered. A detailed list & contact addresses (including e-mail) of the manufacturer's previous customers for similar type of the overhead line fittings sold in the last five years as well as reference letters from at least four of the customers shall be submitted with the tender for evaluation.

5. TESTS AND INSPECTION

5.1. The overhead line fittings shall be inspected and tested in accordance with the requirement of IEC 61284, BS 3288, ISO 1461 and this specification. It shall be the responsibility of the manufacturer to perform or to have performed all the tests specified.

5.2. Copies of previous Type Test Reports issued by an independent and ISO/IEC 17025 accredited testing laboratory shall be submitted with the tender for the purpose of technical evaluation, all in English language.

Copies of Test Reports (to IEC 61284, BS 3288-1) to be submitted shall include the results of the appropriate type tests made on not less than three fittings identical in all essential details with those to be supplied; and shall include the following:

(i) Mechanical Type Tests
(ii) Electrical Type Tests (Resistance and Electrical Heating Cycle Test)
(iii) Galvanizing Test of the Bolts

5.3. The items shall be subject to acceptance tests at the manufacturer's works before dispatch. Acceptance tests shall be witnessed by two Engineers appointed by KPLC.

5.4. Complete Test Reports for Sample & Routine Tests to IEC 61284 and BS 3288 for the items shall be submitted to The Kenya Power and Lighting Company for approval before shipment and delivery.

The test reports shall include:

(i) Verification of Dimensions
(ii) Mechanical Type Tests
(iii) Electrical Type Tests (Resistance and Electrical Heating Cycle Test)
(iv) Galvanizing Test of the Bolts

5.5. On receipt of the conductor fittings/accessories, KPLC will inspect them and may perform or have performed any of the relevant tests in order to verify compliance with the specification. The supplier shall replace/rectify without charge to KPLC, items which upon examination, test or use fail to meet any or all of the requirements in the specification.

6. MARKING AND PACKING

6.1. MARKING.

6.1.1. Each item shall be marked (during manufacture) legibly and indelibly with the following information.

a) Manufacturer's identity
b) Type reference number
c) Applicable conductor sizes (mm²)
d) "KPLC"

6.1.2. Instructions for installation and details on applicable tools shall be included in each package, all in English Language.

6.1.3. Conductor fitting shall be identified with the manufacturer's identification marks and fitting references. This marking shall also be applied to any component of the fitting where the component is separate from the fitting when dispatched by the manufacturer.

6.1.4. The following information shall be engraved or embossed outside of all fittings. The conductor type (AAC, ACSR or Copper) size or size range of the conductor for which the fittings are suitable.

6.2. PACKING

6.2.1. Each item shall be suitably sealed in polythene bag to provide mechanical and corrosion protection to contact surfaces in transit and storage. Fifty numbers of same item shall be packed in cardboard box and the box shall be marked with the following information;
a) Name of item & Batch No.
b) Code No. as per manufacturers' catalogue
c) Applicable conductor size
d) Quantity
e) Name of manufacturer/Country of manufacture
f) Year of manufacture
g) Standard applicable

6.2.2. Packaging shall be such as to permit easy identification of fittings without their removal.

6.2.3. Components of fittings which are not subject to factory assembly shall be secured and packed together as complete fittings, before dispatch.

7. DOCUMENTATION

7.1. The bidder shall submit its tender complete with technical documents required by Annex A (Guaranteed Technical Particulars) for tender evaluation. The technical documents to be submitted (all in English language) for tender evaluation shall include the following:

a) Guaranteed Technical Particulars fully filled and signed by the manufacturer;

b) Copies of the Manufacturer's catalogues, brochures, drawings and technical data of each overhead line fittings on tender;
c) Sales records and customer reference letters;
d) Details of manufacturing capacity and the manufacturer's experience;
e) Copies of required type test reports by a third party testing laboratory accredited to ISO/IEC 17025;
f) Copy of accreditation certificate to ISO/IEC 17025 for the testing laboratory.
g) Manufacturer's warranty and guarantee
h) Manufacturer's letter of authorization, copy of the manufacturer's ISO 9001:2008/ KEBS Diamond mark certificate and other technical documents required in the tender.
i) The following **SHALL** be supplied with the offer.
   (i) Constructional features, material used for components and relevant technical literature in English.
   (ii) All the dimensions of the fitting (inside & outside), and drawings shall be furnished.
   (iii) The current carrying capacity, Temperature rise and other relevant technical details shall also be furnished.
   (iv) The standard to which the fittings are manufactured shall also be mentioned.
   (v) Full details of the type of Oxide inhibiting grease/compound used and documents in proof of tests carried out for compatibility with the conductor material.
   (vi) Documentary evidence to prove ISO 9002 Certification for Bi-metallic Clamps and connectors.

7.2. The successful bidder (supplier) shall submit the following documents/details to The Kenya Power & Lighting Company for approval before manufacture:

a) Guaranteed Technical Particulars signed by the manufacturer;
b) Design Drawings with details of each overhead line fittings to be manufactured for KPLC.
c) Quality assurance plan (QAP) that will be used to ensure that the design, material; workmanship, tests, service capability, maintenance and documentation will fulfil the requirements stated in the contract documents, standards, specifications and regulations. The QAP shall be based on and include relevant parts to fulfil the requirements of ISO 9001:2008
d) Detailed test program to be used during factory testing;
e) Marking details and method to be used in marking the each overhead line fittings;
f) Manufacturer's undertaking to ensure adequacy of the design, good engineering practice, adherence to the specification and applicable standards and regulations as well as ensuring good workmanship in the manufacture of the overhead line fittings for The Kenya Power & Lighting Company;
g) Packaging details (including packaging materials).

7.3 The supplier shall submit recommendations for use, care, storage and routine inspection/testing procedures, all in the English Language, during delivery of the each overhead line fittings to KPLC store

THIS SPACE LEFT INTENTIONALLY BLANK

ANNEX A: Guaranteed Technical Particulars *(to be filled and signed by the Manufacturer and submitted together with copies of manufacturer's catalogues, brochures, drawings, technical data, sales records, customer reference letters, details of manufacturing capacity & experience and copies of type test reports for tender evaluation)*

Tender No. .....

Clause number	KPLC Requirements					Bidder's offer (indicate full details)
4.3.1	**Conductor terminations**					
4.3.1.1	**Ball Ended Hook, Ball Clevis, Socket Clevis and Socket Tongue**					
	Ball Ended Hook					
	Manufacturer and country of manufacture					State
	Standards of manufacture					State
	Reference Number as per BS 3288					State
	Dimensional requirements as per BS 3288-2					Attach a drawing
	Design and construction	Free from defects, sharp edges and swarfs				State
		Corrosion resistant				State
		Material of manufacture				State
		Bolts & nuts	Material and standard of manufacture			State
			Threading	Mechanical properties		State
				Process		State
				Design		State
				Tolerance		State
		Washers	Material of manufacture			State
			Mechanical properties			State
			Surface hardness			State
		Locking devices	Split pins			Attach drawing
			Security clip			Attach drawing
		Manufacturing process				State
		Material manufacture	Steel designation			Attach test report
			Standard of manufacture			
			Chemical composition	Sulphur		
				Phosphorous		
				Nickel		
				Chromium		
				Molybdenum		
				Others		
			Tempering temperature			
			Surface hardness			
	Ball clevis					
	Manufacturer and country of manufacture					State
	Standards of manufacture					State
	Reference Number as per BS 3288					State
	Dimensional requirements as per BS 3288-2					Attach a drawing
	Design and construction	Free from defects, sharp edges and swarfs				State
		Corrosion resistant				State

		Material of manufacture			State
		Bolts & nuts	Material and standard of manufacture		State
			Threading	Mechanical properties	State
				Process	State
				Design	State
				Tolerance	State
		Washers	Material of manufacture		State
			Mechanical properties		State
			Surface hardness		State
		Locking devices	Split pins		Attach drawing
			Security clip		Attach drawing
		Manufacturing process			State
		Material manufacture	Steel designation		Attach test report
			Standard of manufacture		
			Chemical composition	Sulphur	
				Phosphorous	
				Nickel	
				Chromium	
				Molybdenum	
				Others	
			Tempering temperature		
			Surface hardness		
	Socket clevis, single and double hole				
	Manufacturer and country of manufacture				State
	Standards of manufacture				State
	Reference Number as per BS 3288	Socket clevis, single hole			State
		Socket clevis, double hole			
	Dimensional requirements as per BS 3288-2	Socket clevis, single hole			Attach drawing
		Socket clevis, double hole			
	Design and construction	Free from defects, sharp edges and swarfs			State
		Corrosion resistant			State
		Material of manufacture			State
		Bolts & nuts	Material and standard of manufacture		State
			Threading	Mechanical properties	State
				Process	State
				Design	State
				Tolerance	State
		Washers	Material of manufacture		State
			Mechanical properties		State
			Surface hardness		State
		Locking devices	Split pins		Attach drawing
			Security clip		Attach drawing
		Manufacturing process			State
		Material manufacture	Standard of manufacture		
			Steel designation		Attach test report
			Chemical composition	Sulphur	
				Phosphorous	
				Nickel	
				Chromium	
				Molybdenum	

				Others		
			Tempering temperature			
			Surface hardness			
	Socket tongue, single and Double hole					
	Manufacturer and country of manufacture					State
	Standards of manufacture					State
	Reference Number as per BS 3288		Socket tongue, single hole			State
			Socket tongue, double hole			
	Dimensional requirements as per BS 3288-2		Socket tongue, single hole			Attach drawing
			Socket tongue, double hole			
	Design and construction	Free from defects, sharp edges and swarfs				State
		Corrosion resistant				State
		Material of manufacture				State
		Bolts & nuts	Material and standard of manufacture			State
			Threading	Mechanical properties		State
				Process		State
				Design		State
				Tolerance		State
		Locking devices	Split pins			Attach drawing
			Security clip			Attach drawing
		Manufacturing process				State
		Material manufacture	Steel designation			Attach test report
			Standard of manufacture			
			Chemical composition	Sulphur		
				Phosphorous		
				Nickel		
				Chromium		
				Molybdenum		
				Others		
			Surface hardness			
			Tempering temperature			
4.3.2	**Tension Clamp (Strain Clamp)**					State
	Bidders name and address					State
	Manufacturer and country of manufacture					State
	Type designation or catalogue number					State
	Standard of manufacture					State
	Scope – sizes of conductors applicable					State
	Type of tension clamp – No. of bolts					State
	Slip strength					State
	Material of manufacture	Body and keeper	Type of aluminium alloy			Attach test report
			Grade or designation			
			Standard of manufacture			
			% Cu content			
			Inter-crystalline resistant alloy			
			Brinell Hardness			
			Resistivity at 20^{0}C, nΩ			
			Proof stress, MPa			
			Tensile strength, MPa			Declare

			A_{50}% elongation	guaranteed values and Attach test report
		Thread inserts	Type of steel	
			Standard of manufacture	
			Grade or designation	
			Corrosion resistant	
			Mechanical properties	
		Straps	Type of steel	
			Zinc coating thickness (average)	
		Bolts and nuts	Type of steel	
			Standard of manufacture	
			Grade or designation	
			Corrosion resistant	
			Mechanical properties as per ISO 898-1 &2	
		Washers	Type of steel	
			Standard of manufacture	
			Grade or designation	
			Corrosion resistant	
			Surface hardness - HBW	
	Design	Clamp	Conductor shall be able to move along the clamp	
			Trunnion shall be part of the clamp	
		Conductor supporting groove	Profile shall be as per Fig 7 of tender specification	
			Groove radii in body and keeper shall be adjustable to fit conductor closely	
			Groove free from irregularities and sharp edges	
		Clamps shall be free from fatigue damages		
		Straps	Hole in strap and trunnion body shall be round	
			Size of hole shall match trunnion	
		Bolts and nuts	Shall be with metric threads as per ISO 272	
			Bolts shall be attached so avoid accidental drop	
			Provision to tighten from upper part of clamp	
			Long bolts to protrude outside the nut	
			Counter bores and countersink as per DIN 74-1	
		Washers	Shall be as per ISO 7091	
4.3.3	**Suspension clamps**			
	Bidders name and address			State
	Manufacturer and country of manufacture			State
	Type designation or catalogue number			State
	Standard of manufacture			State
	Scope – sizes of conductors applicable			State
	Type of tension clamp	Pivot or Trunion type	Keeper type with U-Clamps	Declare guaranteed values and Attach test report
			Closed Type	
		Envelop type	Clevis ended hook type	
			Tongue ended hook type	
	Applicable for both phase and shield wires for both straight and angle lines			
	Material of manufacture	Body and keeper	Type of aluminium alloy	
			Grade or designation	
			Standard of manufacture	

			% Cu content	
			Inter-crystalline resistant alloy	
			Brinell Hardness	
			Resistivity at 20^{0}C, nΩ	
			Proof stress, MPa	
			Tensile strength, MPa	
			A_{50}% elongation	
		Thread inserts	Type of steel	
			Standard of manufacture	
			Grade or designation	
			Corrosion resistant	
			Mechanical properties	
		Straps	Type of steel	
			Zinc coating thickness (average)	
		Bolts and nuts	Type of steel	
			Standard of manufacture	
			Grade or designation	
			Corrosion resistant	
			Mechanical properties as per ISO 898-1 &2	
		Washers	Type of steel	
			Standard of manufacture	
			Grade or designation	
			Corrosion resistant	
			Surface hardness - HBW	
	Design	General design is as per drawing in Fug. 8 & 9 in annex B		Attach drawing
		Clamp	Conductor shall be able to move along the clamp	Declare guaranteed values and Attach test report
			Trunnion shall be part of the clamp	
			Profile shall be as per Fig 7 of tender specification	
		Conductor supporting groove	Groove radii in body and keeper shall be adjustable to fit conductor closely	
			Groove free from irregularities and sharp edges	
		Clamps shall be free from fatigue damages		
		Bolts and nuts	Hole in strap and trunnion body shall be round	
			Size of hole shall match trunnion	
			Shall be with metric threads as per ISO 272	
			Bolts shall be attached so avoid accidental drop	
			Provision to tighten from upper part of clamp	
			Long bolts to protrude outside the nut	
			Counter bores and countersink as per DIN 74-1	
		Washers	Shall be as per ISO 7091	
4.3.4	**Non Tension (Bolted) Connectors**			
4.3.4.1	**Parallel Groove Clamp (PG Clamp)**			
	Bidders name and address			State
	Manufacturers name and country of manufacture			State
	Standard of manufacture			State
	Type designation or catalogue number			State
	Scope of use and Sizes of cable applicable			State
	Electrical power rating – short circuit current, kA/s			State
	Material	Aluminium Alloy Castings / Forgings / Extrusions		Declare

		Body	Type of aluminium alloy	guaranteed values and Attach test report
			Grade or designation	
			Standard of manufacture	
			% Cu content	
			Inter-crystalline resistant alloy	
			Brinell Hardness	
			Resistivity at 20^{0}C, nΩ	
			Proof stress, MPa	
			Tensile strength, MPa	
			A_{50}% elongation	
		Inserts	Type of steel	
			Standard of manufacture	
			Grade or designation	
			Corrosion resistant	
			Mechanical properties	
		Straps	Type of steel	
			Zinc coating thickness (average)	
		Bolts and nuts	Type of steel	
			Standard of manufacture	
			Grade or designation	
			Corrosion resistant	
			Mechanical properties as per ISO 898-1 &2	
		Washers	Type of steel	
			Standard of manufacture	
			Grade or designation	
			Corrosion resistant	
			Surface hardness - HBW	
	Design	General design is as per drawing in Fig. 10, 11 & 12 in annex B		Attach drawing
		Conductor supporting groove	Conductor shall be able to move along the clamp	Declare guaranteed values and Attach test report
			Groove radii in body shall be adjustable to fit conductor closely	
			Groove free from irregularities and sharp edges	
		Clamps shall be free from fatigue damages		
		Bolts and nuts	Hole in strap and body shall be round	
			Shall be as per ISO 272	
			Bolts shall be attached so avoid accidental drop	
			Provision to tighten from upper part of clamp	
			Long bolts to protrude outside the nut	
			Counter bores and countersink as per DIN 74-1	
		Washers	Shall be as per ISO 7091	
4.3.4.2	**Connectors(Line Taps)**			
4.3.4.2.1	**General**			State
4.3.4.2.2	**Aluminium line taps**			
	Manufacturers name and country of manufacture			
	Standard of manufacture			
	Type designation or catalogue number			
	Scope of use and Sizes of cable applicable			
	Electrical power rating – short circuit current, kA/s			
	Material of	Body	Shall be made of electrolytic corrosion resistant,	Declare

	manufacture		high strength aluminium alloy	guaranteed values and Attach test report
			Type designation of aluminium alloy	
			Standard of manufacture	
			Chemical composition	
			Mechanical properties	
		Bolts and nuts	Type of steel	
			Standard of manufacture	
			Grade or designation	
			Corrosion resistant	
			Mechanical properties as per ISO 898-1 &2	
	Design	General design is as per drawing in Fig. 13 in annex B		Attach drawing
4.3.4.2.3	**Copper line taps**			
	Bidders name and address			State
	Manufacturers name and country of manufacture			State
	Standard of manufacture			State
	Type designation or catalogue number			State
	Scope of use and Sizes of cable applicable			State
	Electrical power rating – short circuit current, kA/s			State
	Material of manufacture	Body	Shall be made of electrolytic corrosion resistant, high strength aluminium alloy	Declare guaranteed values and Attach test report
			Type designation of aluminium alloy	
			Standard of manufacture	
			Chemical composition	
			Mechanical properties	
		Bolts and nuts	Type of steel	
			Standard of manufacture	
			Grade or designation	
			Corrosion resistant	
			Mechanical properties as per ISO 898-1 &2	
	Design	General design is as per drawing in Fig. 14 in annex B		Attach drawing
4.3.4.2.4	**Bimetallic line taps**			
	Bidders name and address			State
	Manufacturers name and country of manufacture			State
	Standard of manufacture			State
	Type designation or catalogue number			State
	Scope of use and Sizes of cable applicable			State
	Electrical power rating – short circuit current, kA/s			State
	Material of manufacture	Body	Shall be made of electrolytic corrosion resistant, high strength aluminium alloy	Declare guaranteed values and Attach test report
			Type designation of aluminium alloy	
			Standard of manufacture	
			Chemical composition	
			Mechanical properties	
		Bolts and nuts	Type of steel	
			Standard of manufacture	
			Grade or designation	
			Corrosion resistant	
			Mechanical properties as per ISO 898-1 &2	
	Design	General design is as per drawing in Fig. 13 in annex B		Attach drawing

4.4	**Finish and Workmanship**	Declare
4.5	Quality Management System	State
	Quality Assurance Plan	State
	Copy of ISO 9001:2008 Certificate	State
	Manufacturer's experience	State
	Manufacturing Capacity (units per month)	State
	List of previous customers	State
	Customer reference letters	State
5.1	Test standards and responsibility of carrying out tests	provide
5.2	Copies of Type Test Reports submitted with tender	provide
5.3	Acceptance tests to be witnessed by KPLC at factory before shipment	provide
5.4	Test reports to be submitted by supplier to KPLC for approval before shipment	provide
5.5	Replacement of rejected overhead line fittings	provide
[illegible]	Marking	provide
6.2	Packing	provide
7.1	Documents submitted with tender	provide
7.2	Documents to be submitted by supplier to KPLC for approval before manufacture	provide
8.0	Manufacturer's Guarantee and Warranty	provide
9.0	List catalogues, brochures, technical data and drawings submitted to support the offer	provide
10.0	List customer sales records and reference letters submitted to support the offer	provide
11.0	List Test Certificates submitted with tender	provide
12.0	List test reports of the surge arresters to be submitted to KPLC for approval before shipment	provide
13.0	Statement of compliance to specification (indicate deviations if any & supporting documents)	provide

NOTE:

1) *Bidders shall give full details of the offered values for the items on order as per Annex A. The details provided shall conform to the test reports and their certificates as required by clause 5.2., well labeled drawings complete with dimensions, catalogues and/or brochures for the purpose of tender evaluation. Bidders who shall have not complied by this requirement shall be automatically disqualified from bidding this item.*

2) *The schedule in Annex A does not in any way substitute for detailed information required elsewhere in the specification.*

.....

Manufacturer's Name, Signature, Stamp and Date

ANNEX B: General Arrangement Drawings *(ATTACHED)*

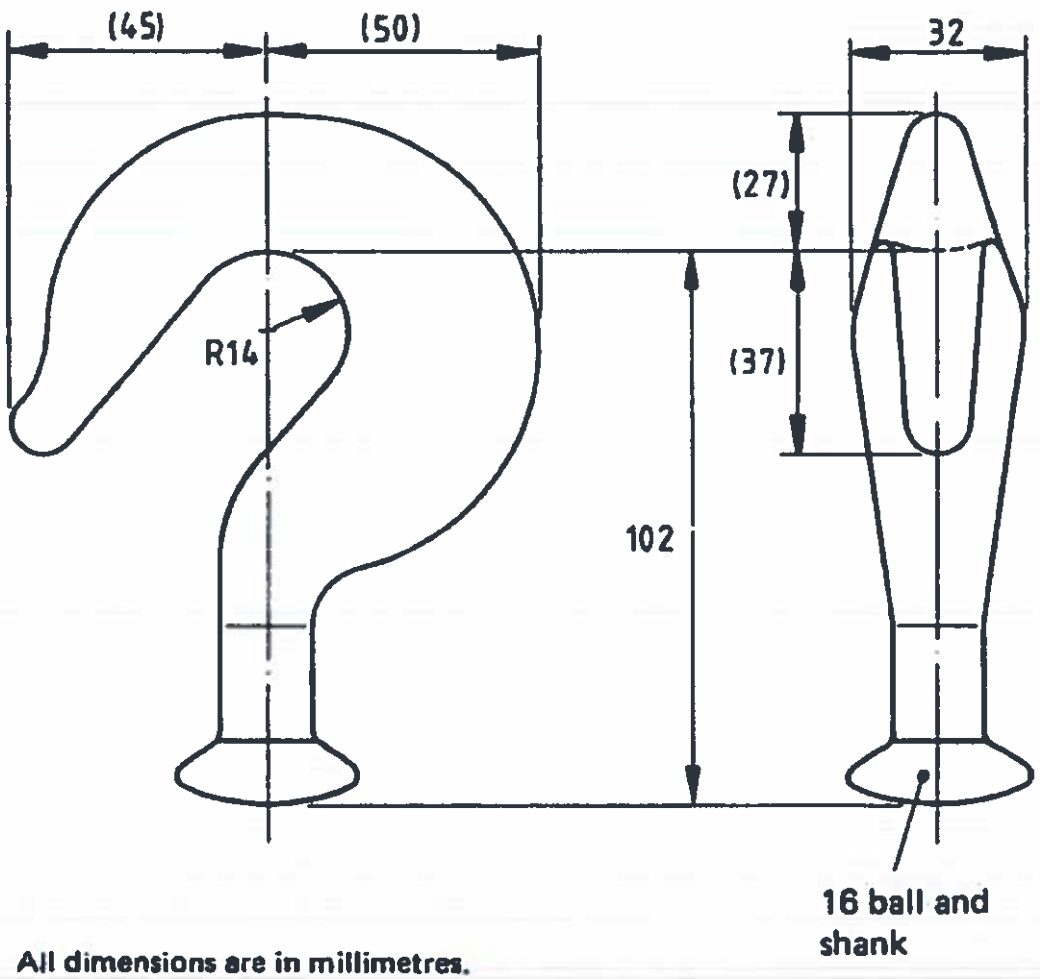

All dimensions are in millimetres.

Figure 1: Ball-ended hook: reference number 15/81 (minimum failing load – 70kN)

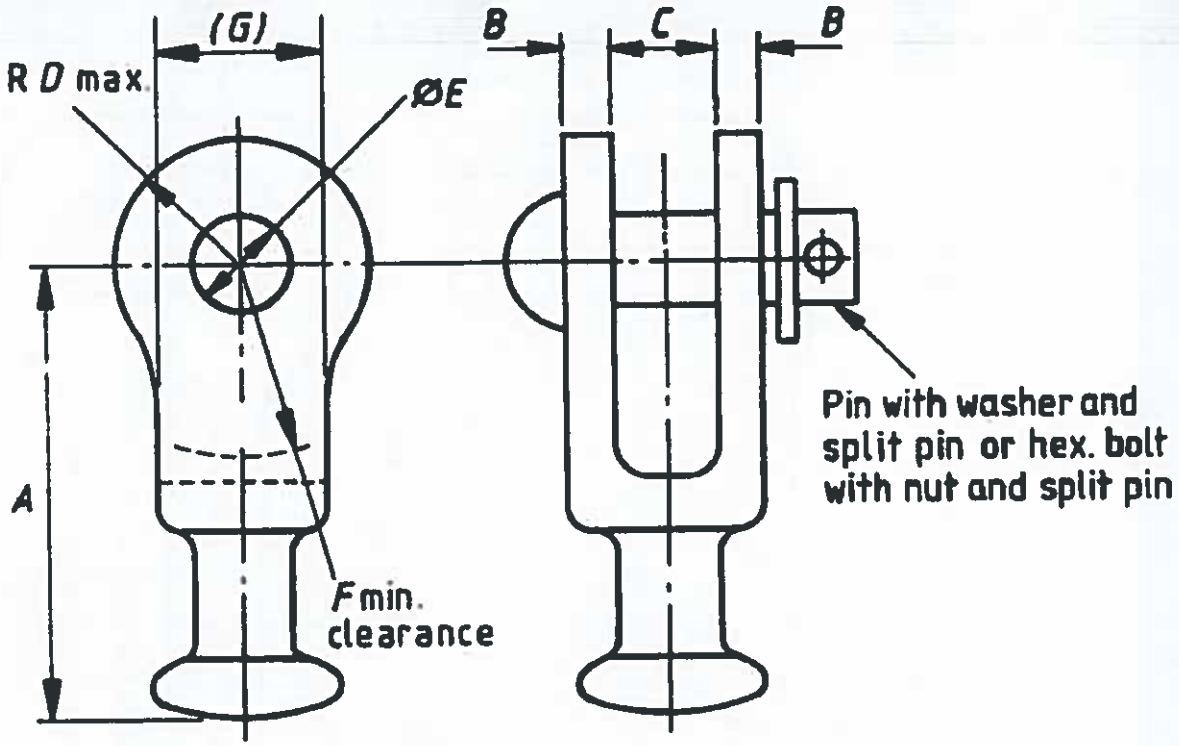

NOTE. Pin, split pin and washer (or bolt, nut and split pin) are included.

Table 1: Dimensions of ball and clevis: Reference number 15/83 as per BS 3288-2

Reference number	Minimum failing load	Ball size	A	B	C	D	ΦE	F	Pin		Bolt	
									Diameter	Length	Diameter	Length
	kN		mm	mm	mm	mm	mm	mm	mm	mm	mm	mm
15/83	70	16	89	8	18.5	23	18	32	16	50	M16	65

Figure 2: Ball clevis: Reference number 15/83 as per BS 3288-2

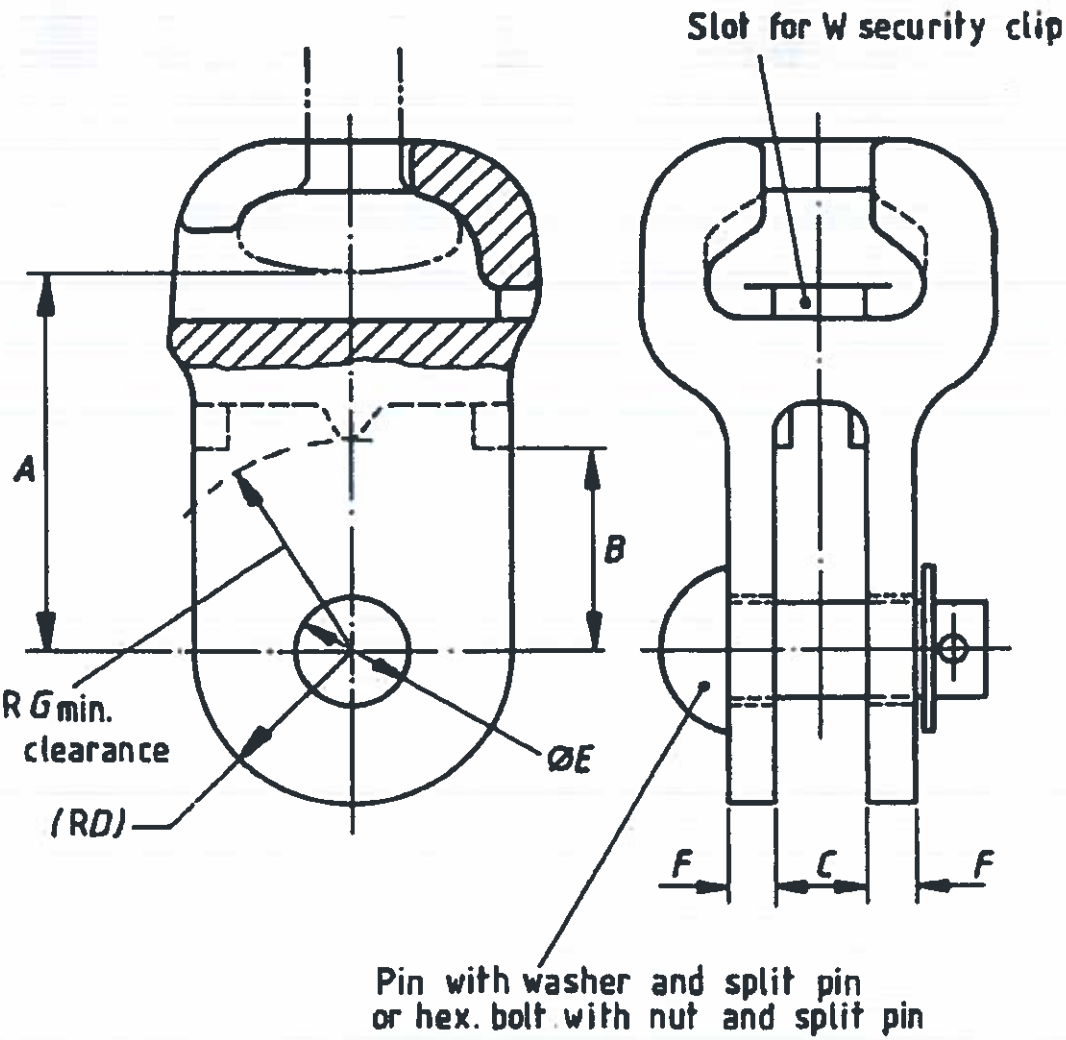

NOTE. Security clip, pin, split pin and washer (or bolt, nut and split pin) are included.

Table 2: Dimensions of socket clevis: Reference number 15/84 as per BS 3288-2

Reference number	Minimum failing load	Socket size	A	B	C	D	ϕ E	F	G	Pin		Bolt	
										Diameter	Length	Diameter	Length
	kN		mm	mm	mm	mm		mm	mm	mm	mm	mm	mm
15/83	70	16	168	59	18.5	23	18	8	38	16	50	M16	65

Figure 3: Socket clevis, single hole: Reference number 15/84 as per BS 3288-2

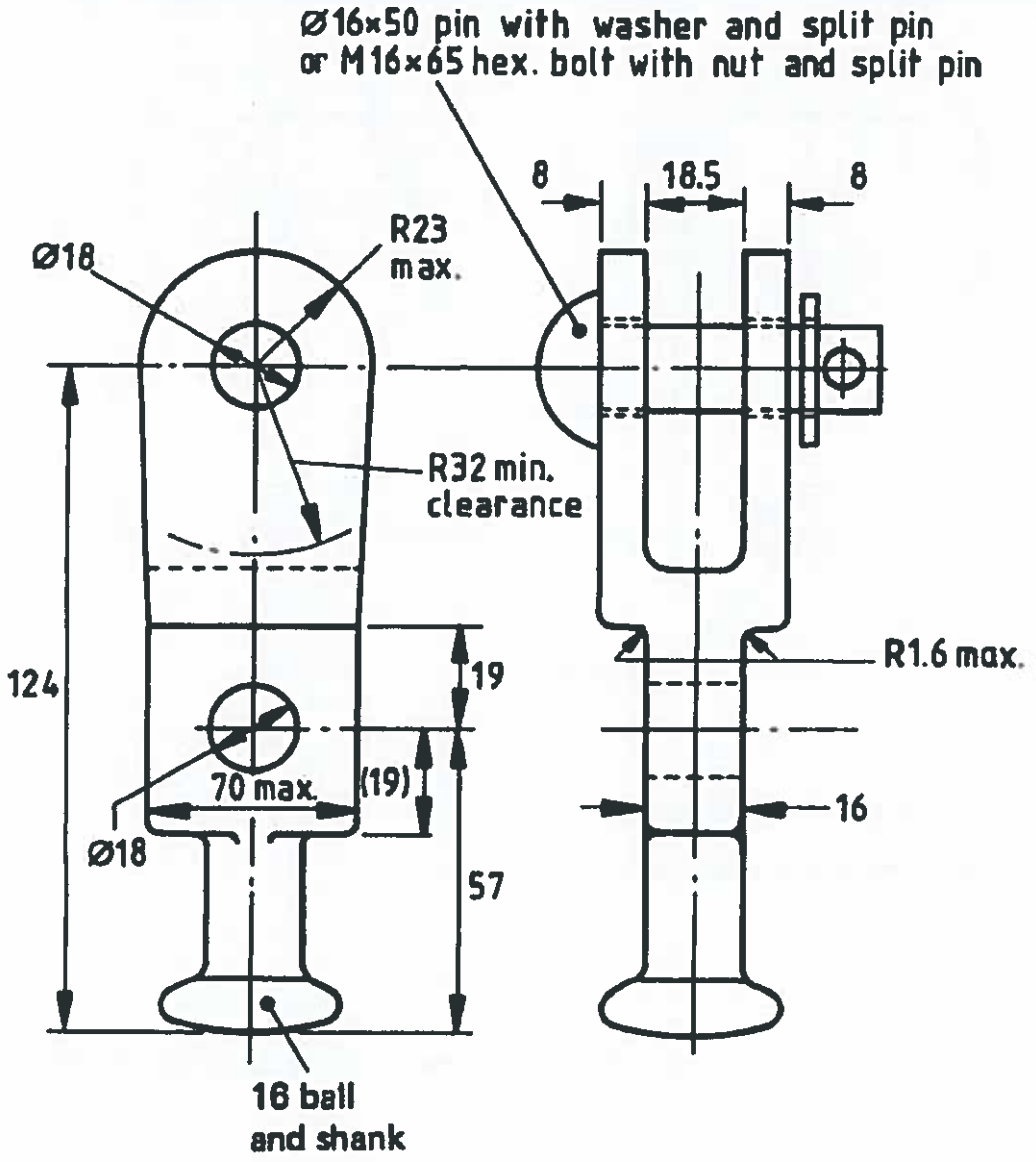

All dimensions are in millimetres.

Figure 4: Sock clevis, double hole: reference number 15/25 (minimum failing load – 70kN)

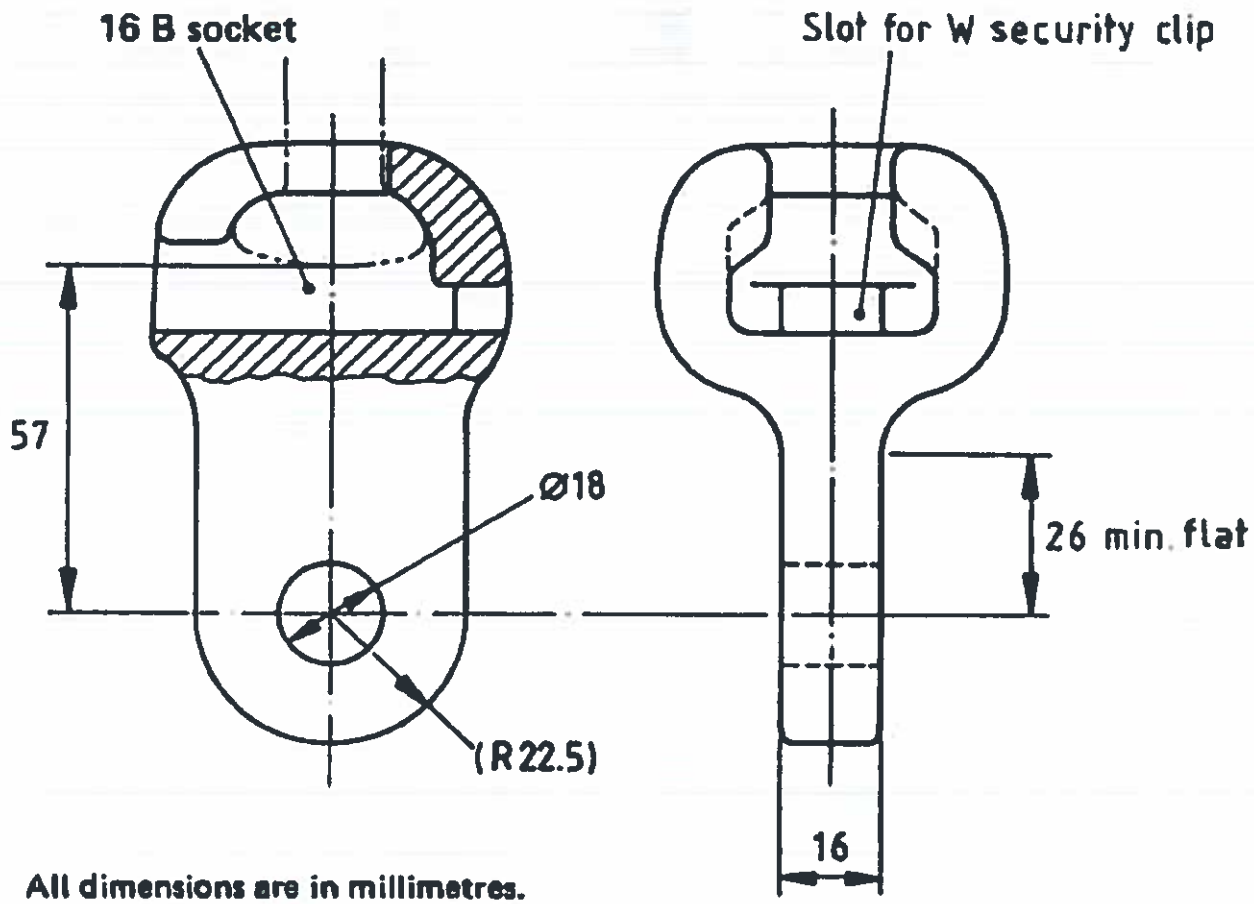

All dimensions are in millimetres.

NOTE. Security clip is included.

Figure 5: Socket tongue, single hole: reference number 15/85 (minimum failing load – 70kN)

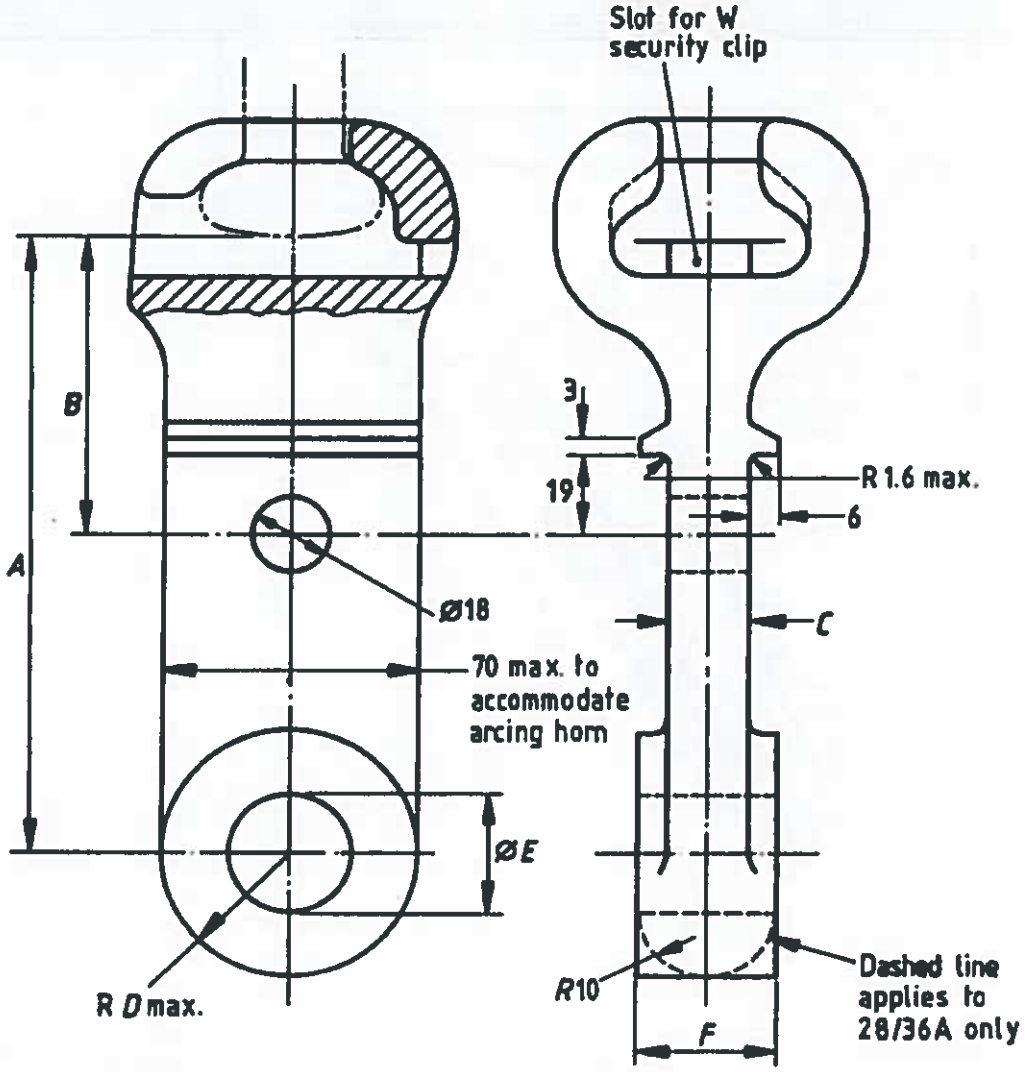

All dimensions are in millimetres.

NOTE. Security clip is included.

Table 3: Dimensions of socket tongue: Reference number 15/35 as per BS 3288-2

Reference number	Minimum failing load	Ball size	A	B	C	D max	ΦE	F
	kN		mm	mm	mm	mm	mm	mm
15/35	70	16B	130	86	16	23	18	16

Figure 6: Socket tongue, double hole: reference number 15/85 (minimum failing load – 70kN)

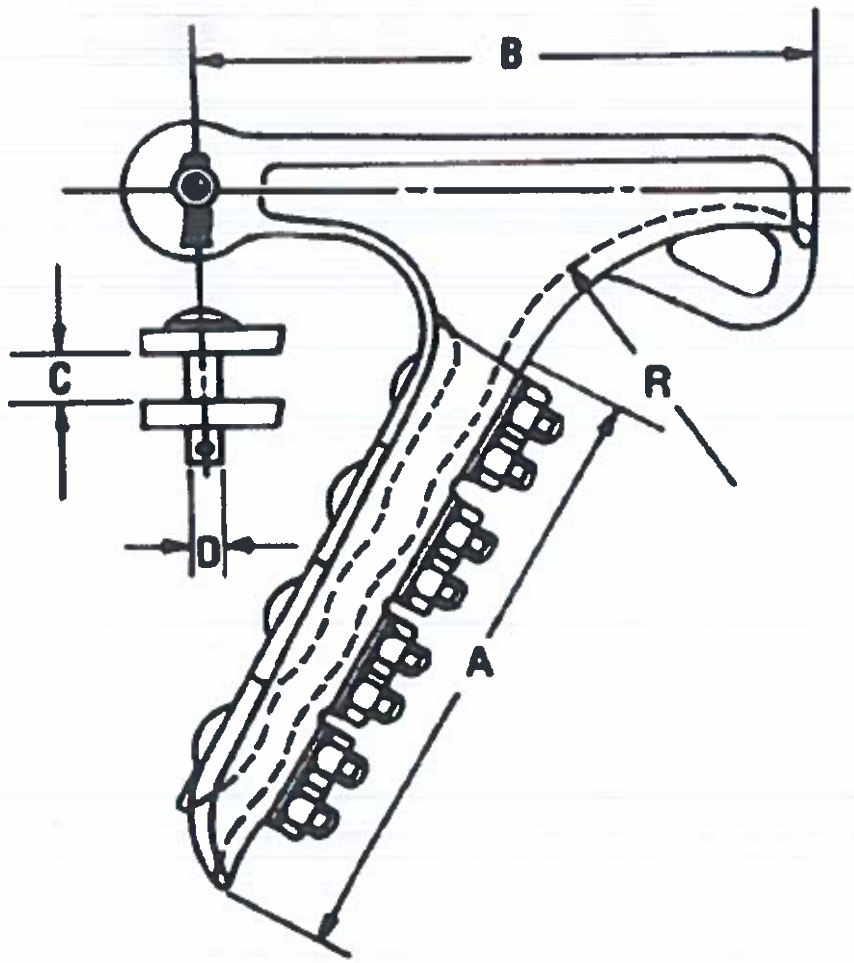

Designation	Conductor Range (mm)		Dimensions (mm)					U-Bolt		Ultimate Strength Kgs
	Max	Min	A	B	C	D	R	No	Size	
A	5.1	12.5	187	203	17.4	16	95	3	M12	6,810
B	12.4	18.3	225	221	20.6	16	121	4	M12	9,090
C	18	30.5	400	350	35	25.4	187	5	M16	13,600

Figure 7: Bolted Tension (Strain) Clamp

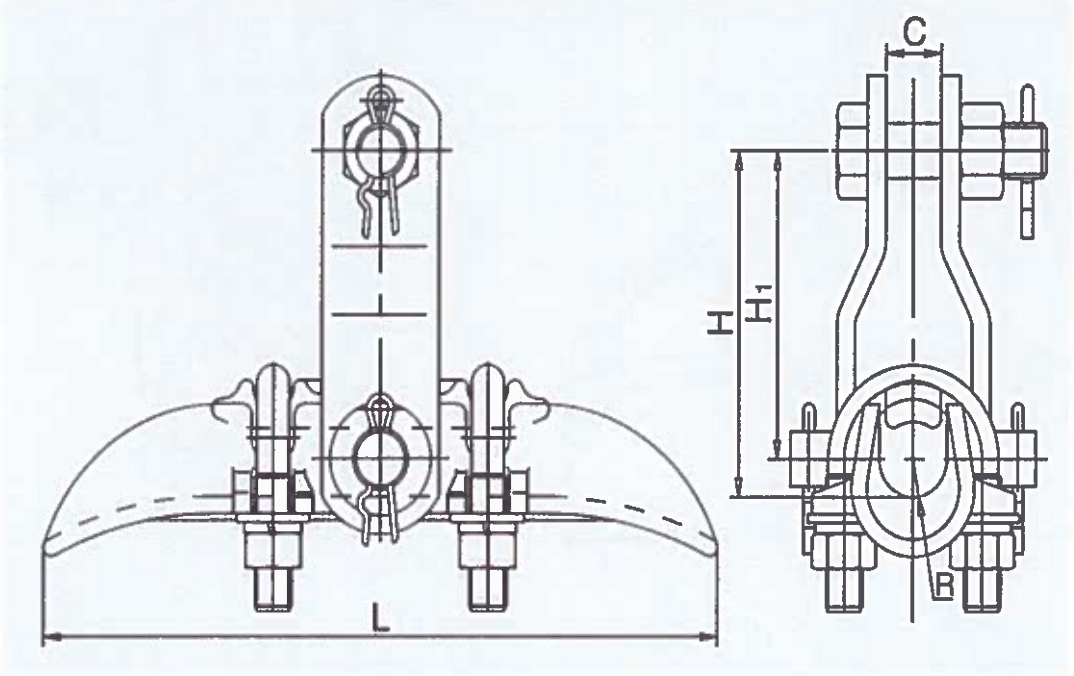

Conductor Diameter (mm)	Dimensions (mm)					Rated Failure Load (kN)	Approximate weight Kg
	H	H1	L	R	C		
5.0~6.0	82	70	180	4.0	18	40	1.4
7.1~13.0	82	70	200	7.0	22	40	1.5
13.1~21.0	102	90	220	11.0	18	40	2.0
21.1~26.0	110	90	250	13.5	18	40	3.0
23.0~33.0	157	140	300	17		70	5.7

Figure 8: Trunnion Type Suspension Clamp body

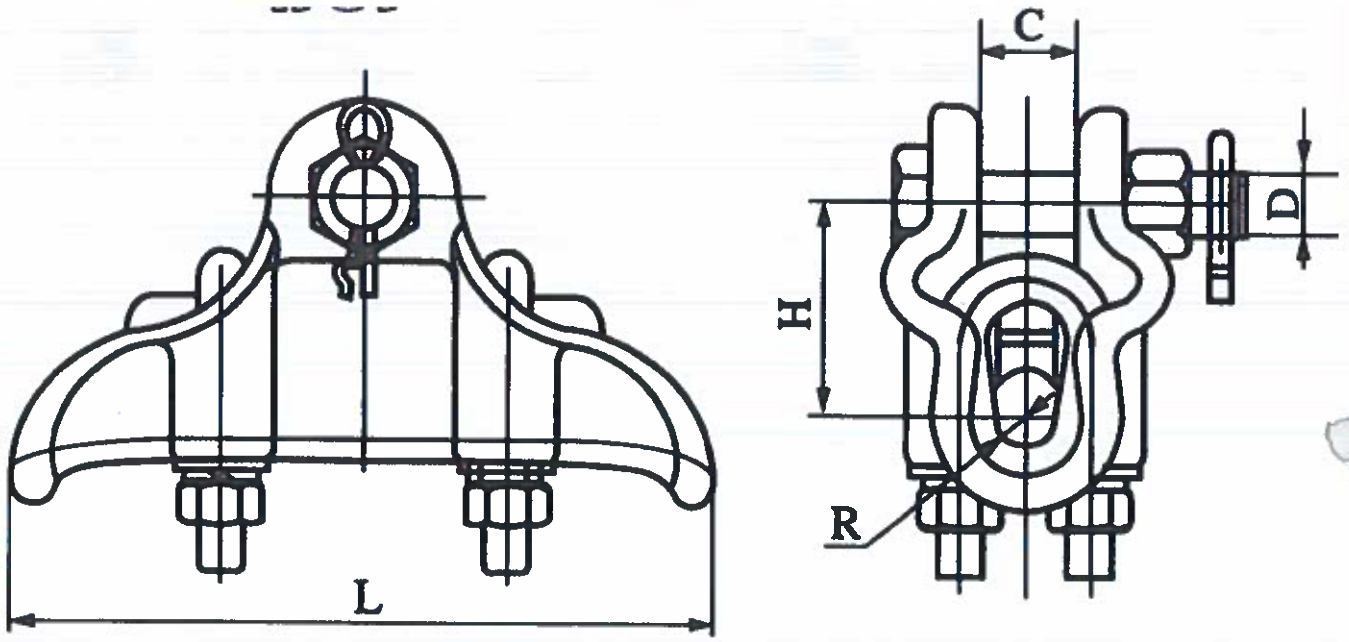

Applicable conductor (mm)	Dimensions					Nominal failure load (kN)	Approximate weight (Kg)
	H	C	D	R	L		
5.1 – 12.5	50.5	23	16	8	166	40	1
12.4 – 18.3mm	52.5	25	16	11.5	200	40	1.5
19.0 – 23.5	59.5	27	16	13.5	225	50	2.3
24.2 – 28.0	70	32	16	16	260	60	4.4

Figure 9: Aluminium Alloy Envelope Type Suspension Clamp for Overhead Transmission Line

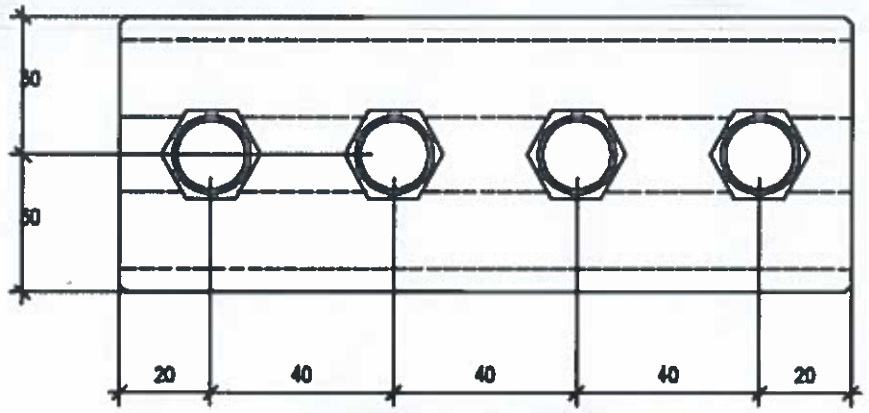

TOP ELEVATION

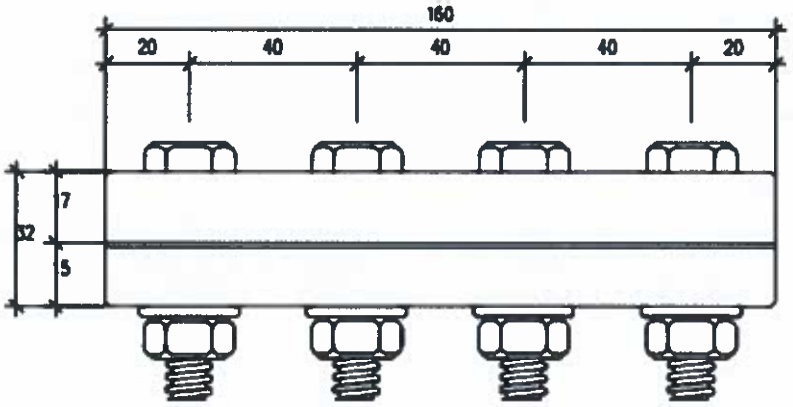

SIDE ELEVATION

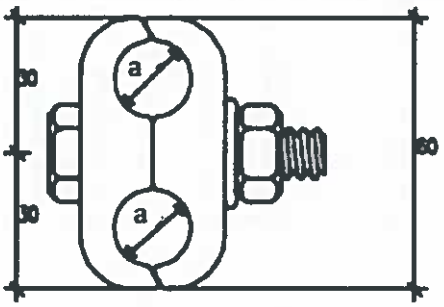

SIDE ELEVATION

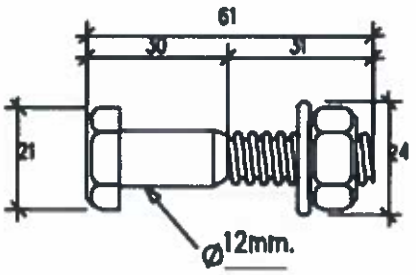

BOLT,WASHER AND NUT ELEVATIONS

Figure 10: Parallel Groove Clamp (4 Bolt) for conductors up-to 300mm^2

Note: *Dimension "a" shall be designed based on the sizes required on the tender.*

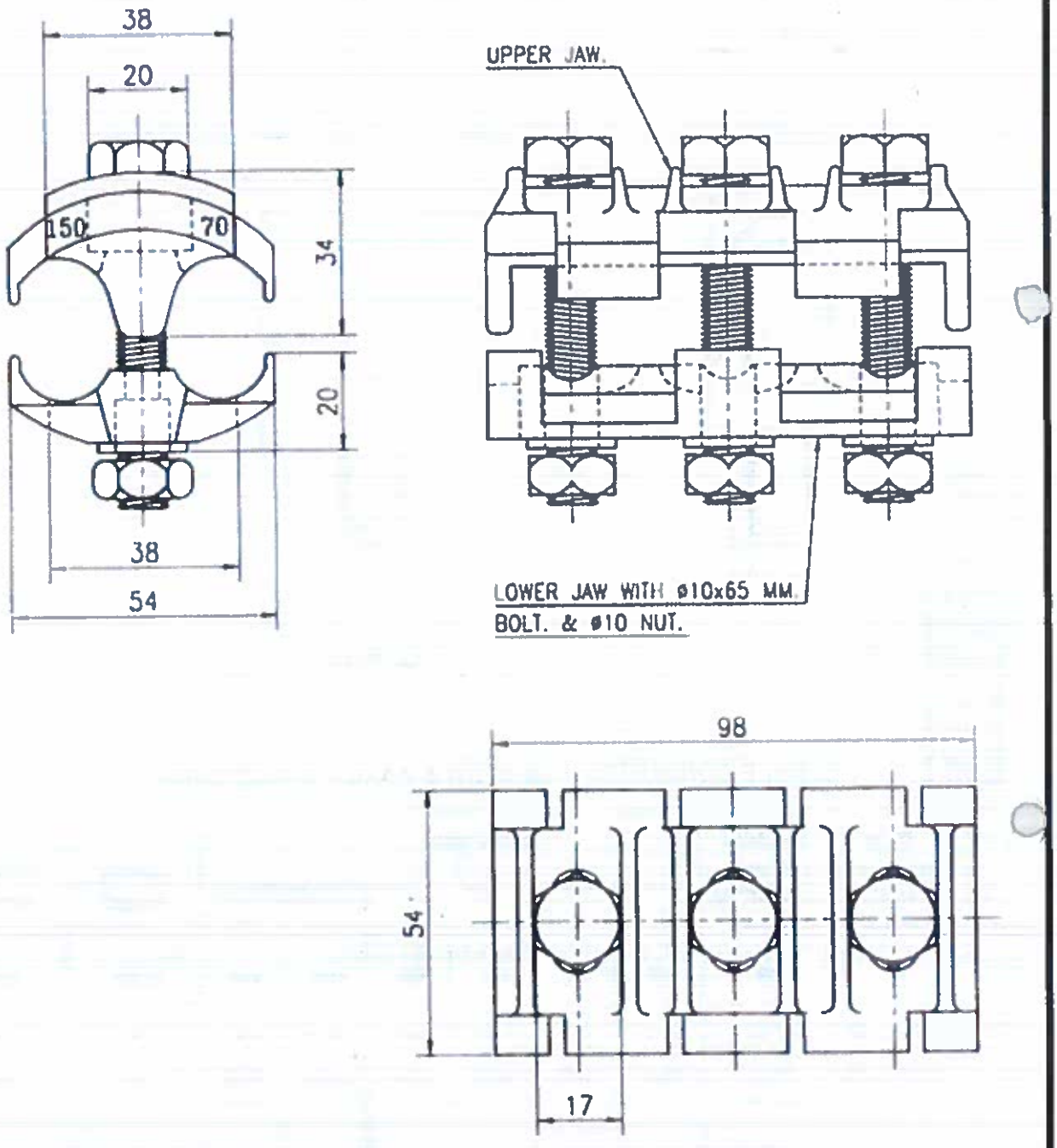

Figure 11: Parallel Groove Alluminium Alloy Clamps for 70-150 mm^2

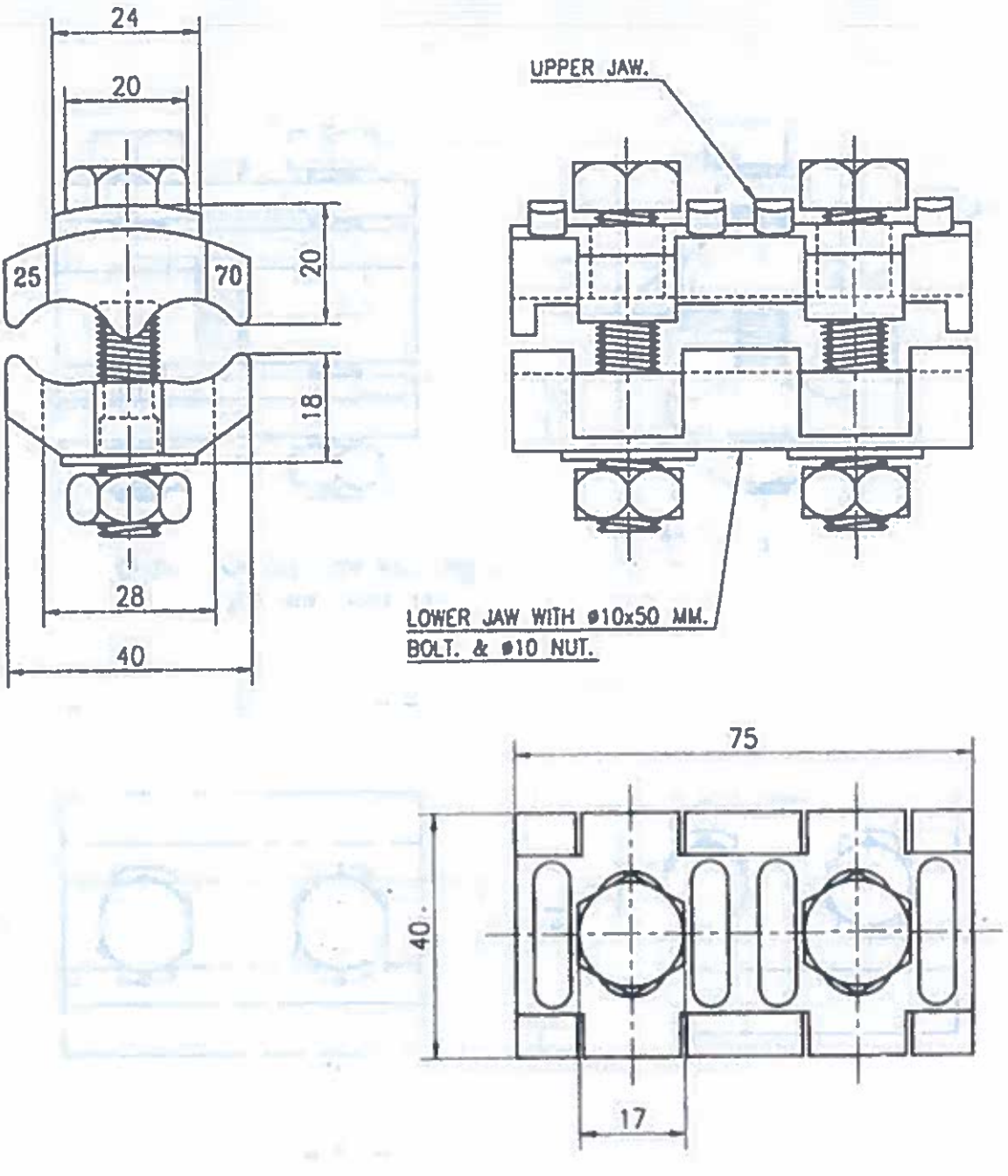

Figure 12: Parallel Groove Alluminium Alloy Clamps for 25-70 mm^2

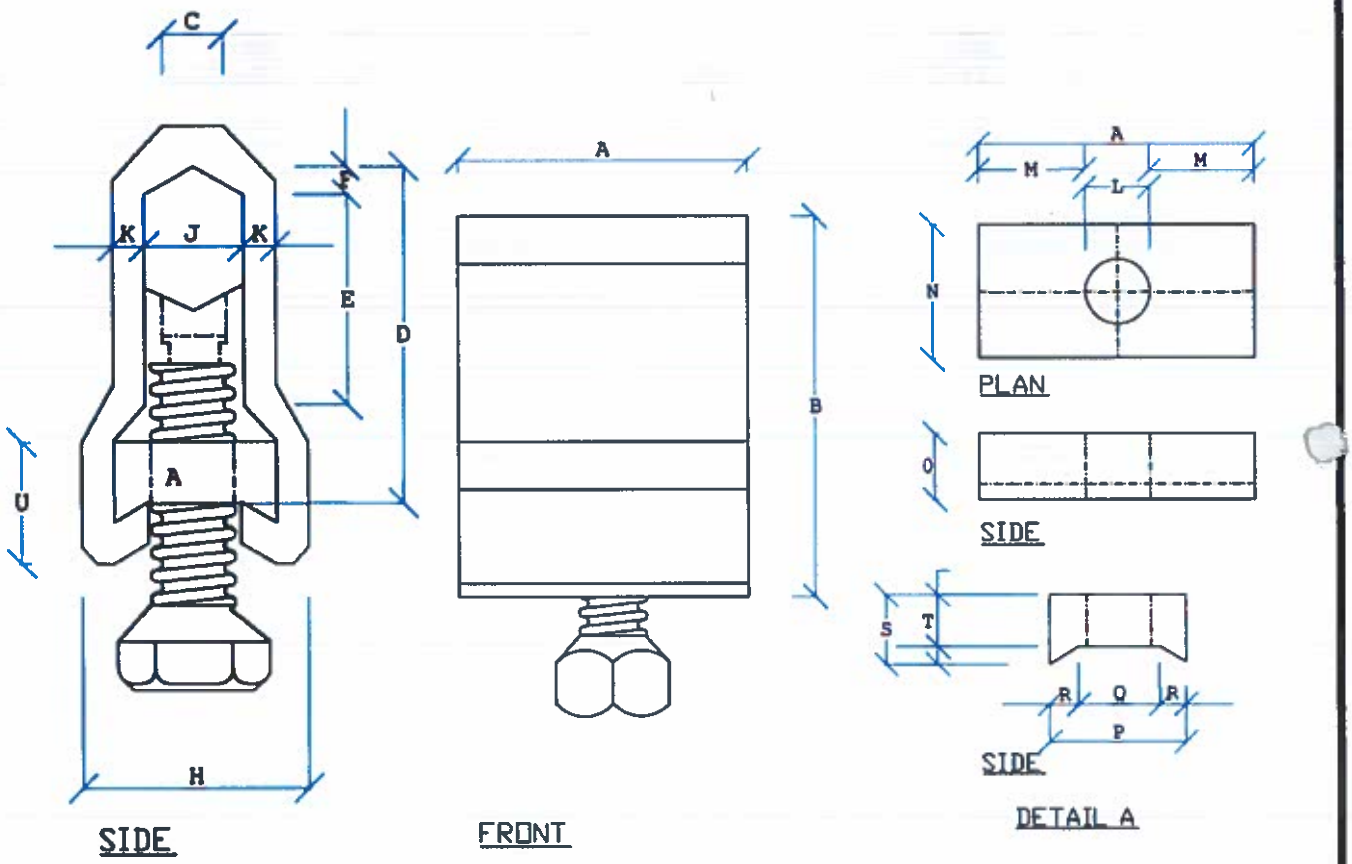

LINE TAP	A	B	C	D	E	F	G	H	J	K	L	M	N	O	P	Q	R	S	T
For 50mm^2	32	42	6	26	20	2.5	6	22	10	3	8	12	16	8	16	10	3	8	6
For 100mm^2	48	58	9	38	25	4	8	28	15	3.5	12	18	22	12	22	12	5	12	8

1. All dimensions are in millimetres
2. All the values are minimum values

Figure 13: Aluminium Line Tap

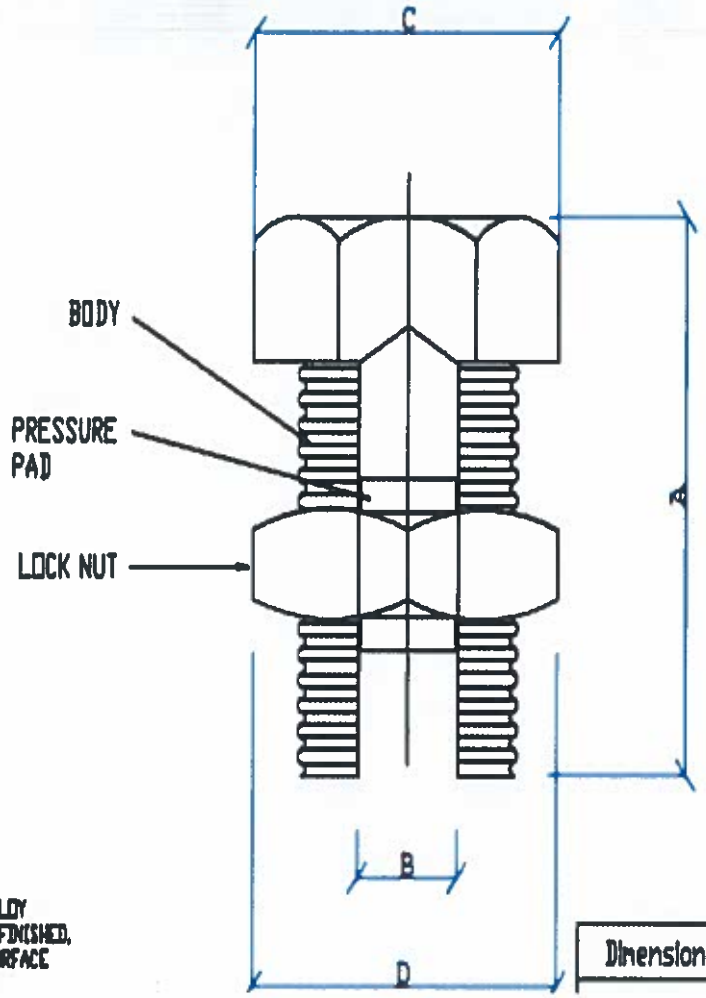

MATERIAL:
HIGH STRENGTH CAST COPPER ALLOY (HIGH COPPER CONTENT) TINNED FINISHED, PRESSURE PADS WITH SERRED SURFACE

Dimensions	A	B	C	D

Table 4: Dimensions of copper connector line taps

Conductor size/ Dimension (mm)	A	B	C	D
10 – 25MM²	30	6.5	16	20
25 – 70MM²	42	12	24	32
750 – 120MM²	55	15	30	37
150MM²	74	19	48	52

Figure 14: Bi-metal connector (Bi-metal Line Tap)